49.1CGM04.100

Air Radar 73PCS / CGM04

ROKR

WARNING:

01. This product is powered by USB connection and does not contain Type-C power cord, which must be provided by yourself (Input: 5V ⎓ 1A).
02. Not suitable for children under 3 years old.
03. The product shall only be used with a transformer for product or a power supply for it.
04. The product shall be used with the power supply supplied, if the transformer is supplied with the product.
05. The transformer or power supply is not a toy or model.
06. Misuse of transformer can cause electrical shock.
07. The power supply used with the electric toy shall be regularly examined for damage to the supply cord, plug, enclosure or other parts, and in the event of damage, it shall not be used until the damage has been repaired.
08. Do not connect the wire to output socket.
09. The product is not to be connected to more than the recommended number of power supplies.
10. If the product contains motor, motor may be a hot component. Do not touch it to avoid burns while operating.
11. This product is only to be connected to equipment bearing either of the following symbols: ⧈ or ⧈.
12. This product does not need liquid cleaning, and please clean the product with clean soft cloth.
13. Children should be accompanied by adults while assembling.
14. Please keep the product away from flammable substances and humid environments to prevent damage.
15. This product contains functional edges and points that are sharp and hazardous. To prevent puncture injuries, adult supervision is required.
16. The instruction must be retained since it contains important information.

2 P3 Part P3 in Bag No. 2 | Special attention in assembly | Ensure that the gears connect smoothly | Cut leftover cutting points | Flip to assemble | 1 Step 1 | 2 Step 2

Instructions for cutting the sprues
When cutting, make sure the nai clipper fit tightly to the parts.

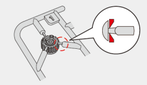

Cut leftover cutting points

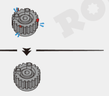

Scan the QR code or go to **Community.robotime.com** to discover DIY Ideas, quick tips & WIN free kits

1

Scan for assembling videos

When cutting, make sure the nail clipper fit tightly to the parts.

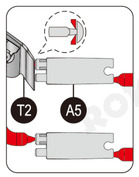

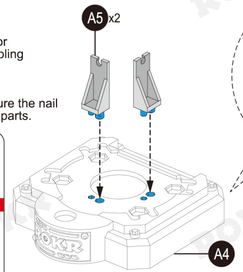

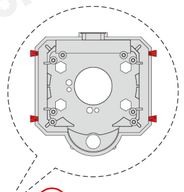

Cut leftover cutting points
1. When cutting, make sure the nail clipper fit tightly to the parts.
2. Secondary trimming is required to conceal the cutting points.

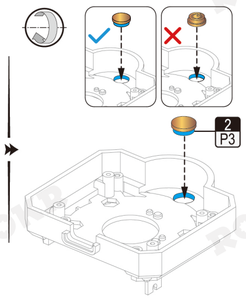

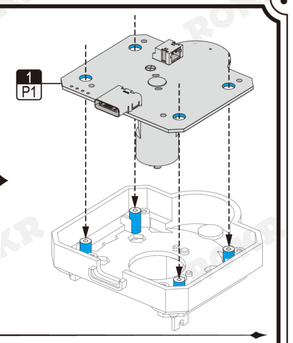

Tighten the screws diagonally
The other two are spares

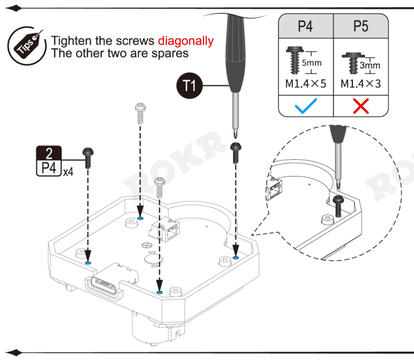

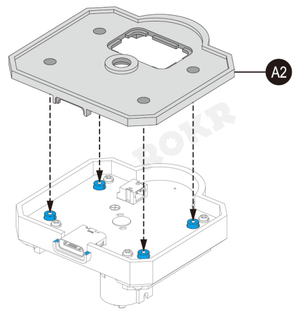

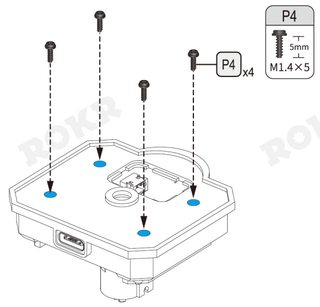

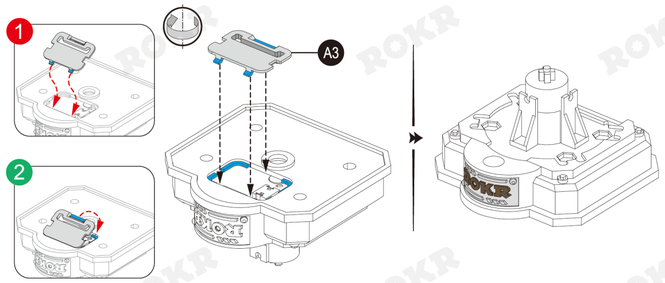

2

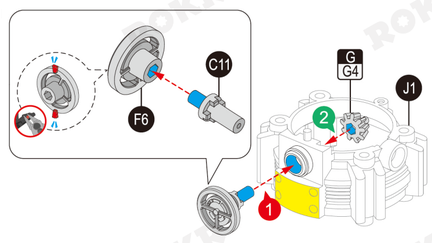

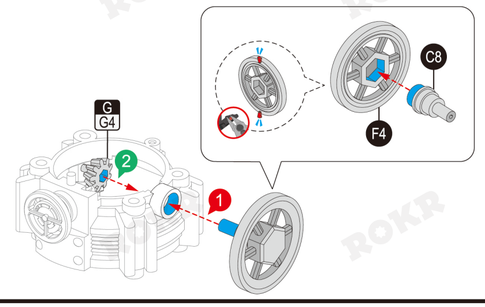

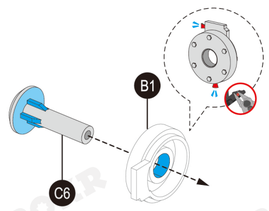

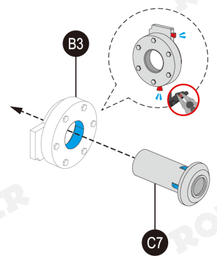

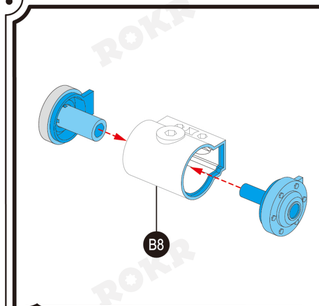

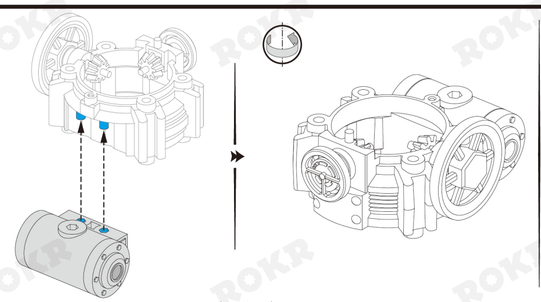

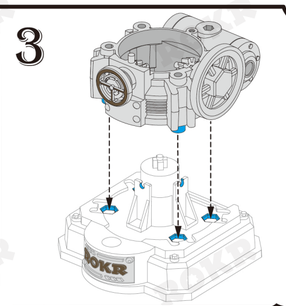

Make sure the gear is pressed into the bayonet

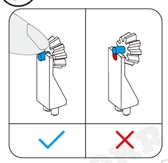

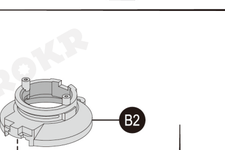

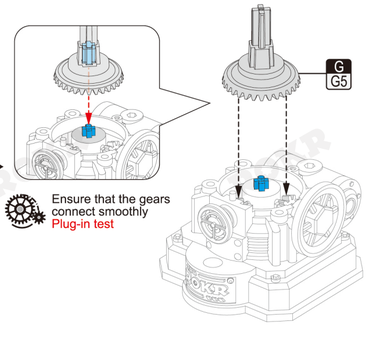

Ensure that the gears connect smoothly
Plug-in test

1 Connect to the power supply:

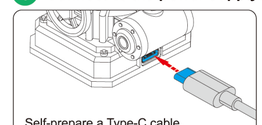

Self-prepare a Type-C cable.
Input power supply: 5V ⎓ 1A
Note: Over-current protection provided, adapters ≥ 1A are acceptable.

2 Single click: Power on (lights up and motor rotates)

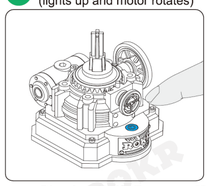

3 Single click: Switch mode (lights up only, no rotation)

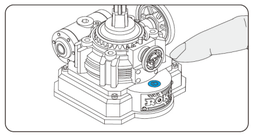

4 Single click: Power off (disconnect power supply, continue to assemble)

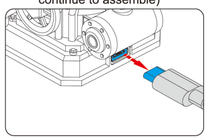

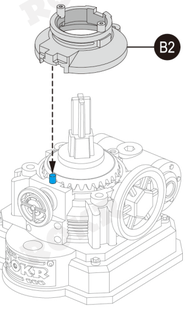

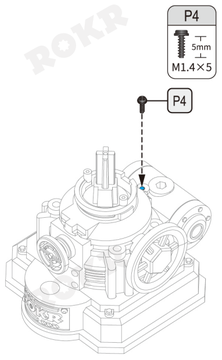

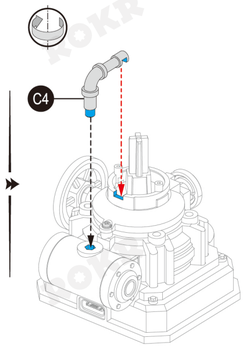

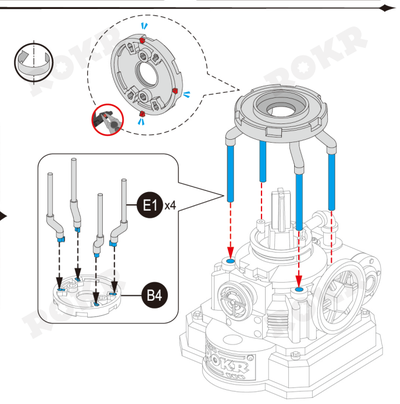

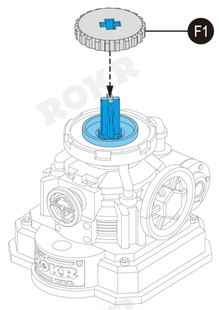

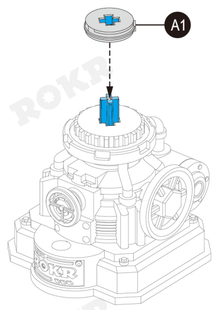

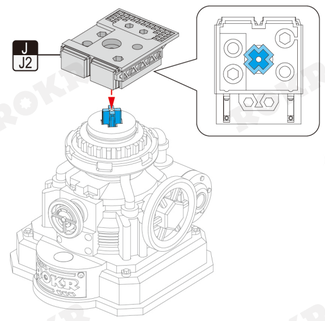

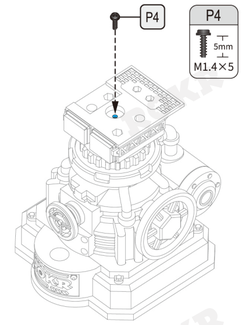

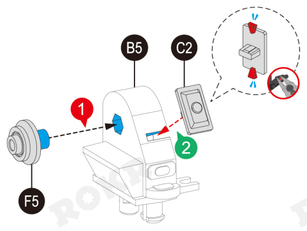

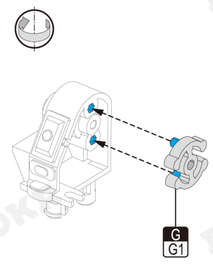

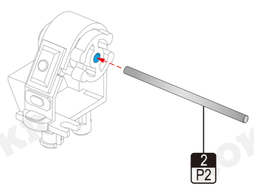

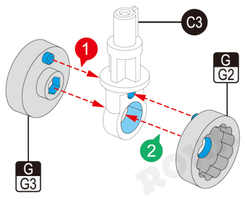

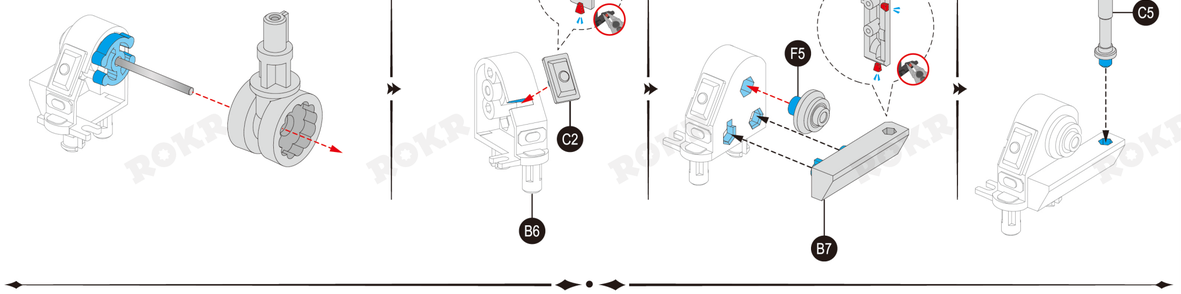

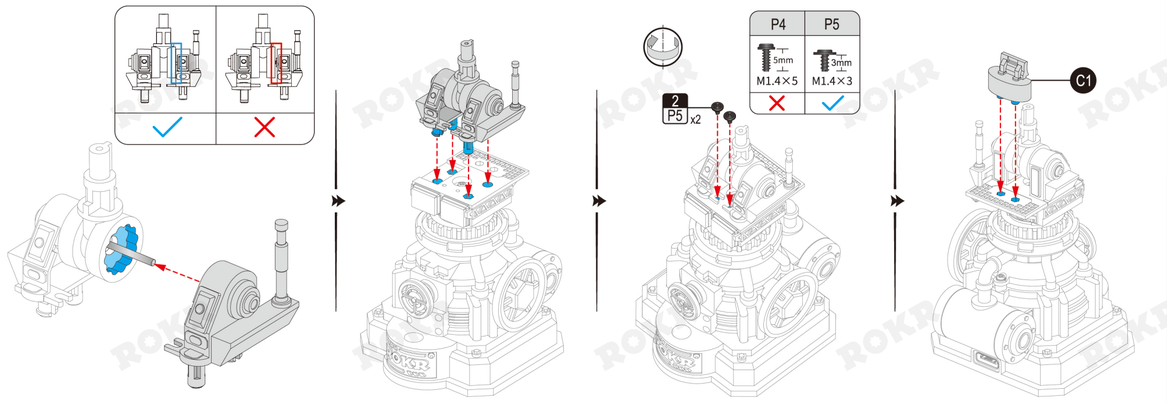

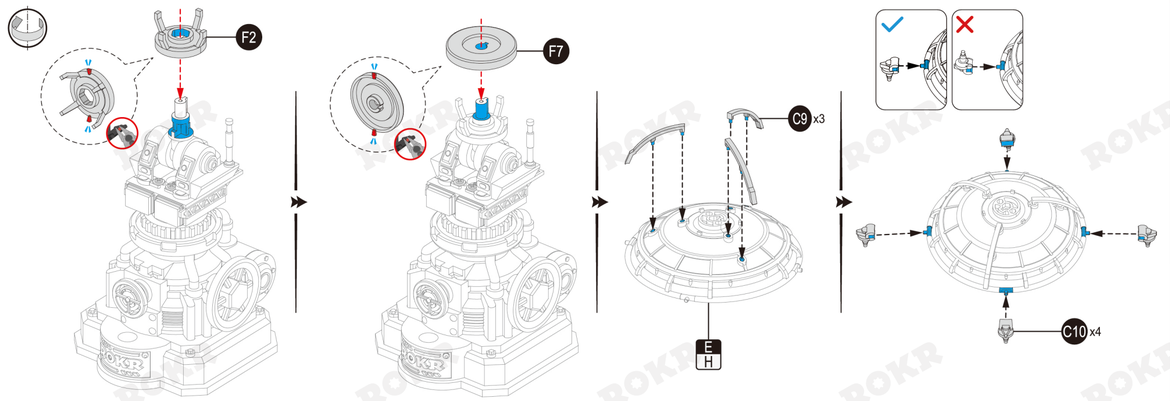

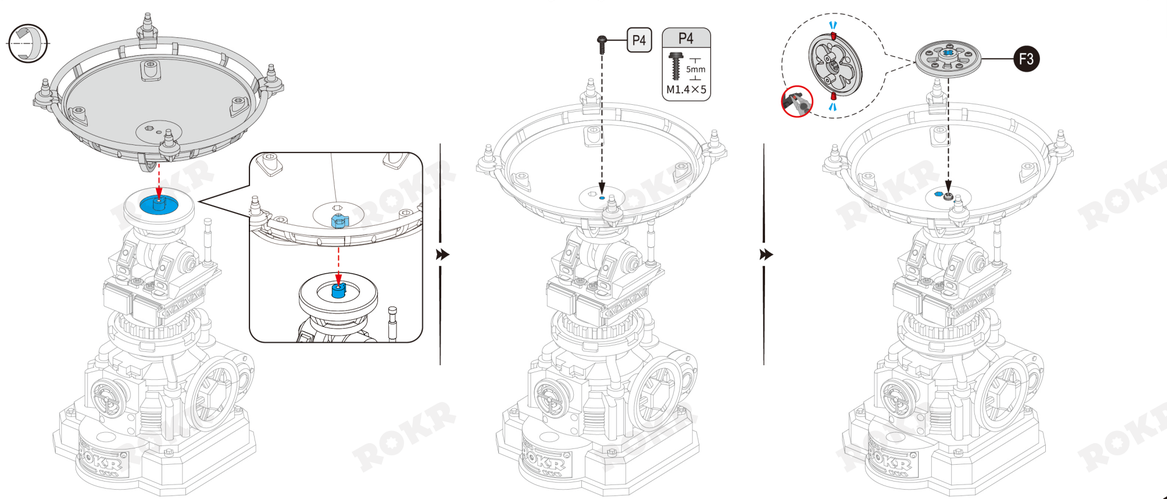

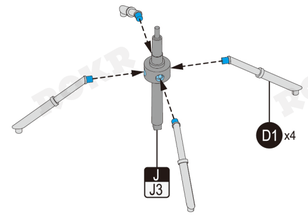

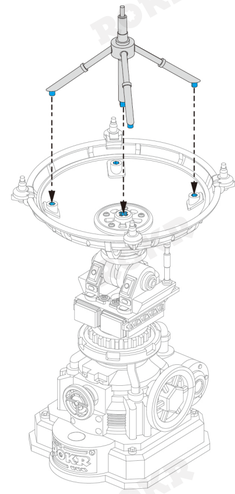

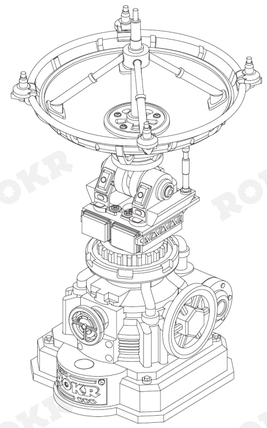

4 Basic Gameplay (Only 1 Model)

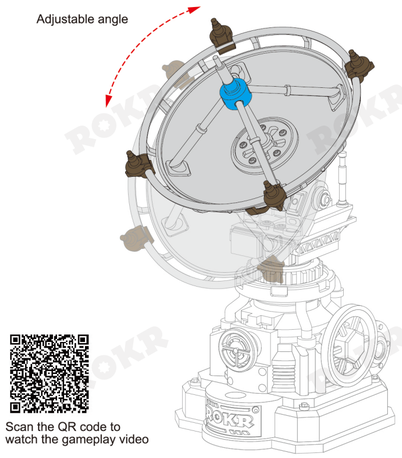

Scan the QR code to watch the gameplay video

1 Connect to the power supply:

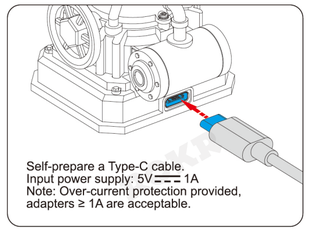

Self-prepare a Type-C cable.
Input power supply: 5V⎓1A
Note: Over-current protection provided, adapters ≥ 1A are acceptable.

2 Single click: Power on
(lights up and motor rotates)

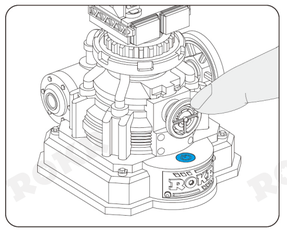

3 Single click: Switch mode
(lights up only, no rotation)

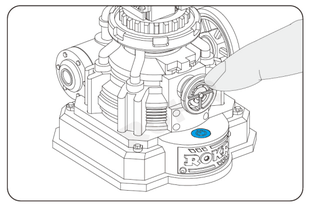

4 Single click: Power off

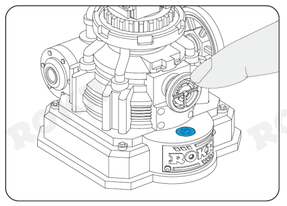

5 Advanced Gameplay (Multiple Models Connection)

In the interconnection mode, products can control each other by receiving and transmitting signals.

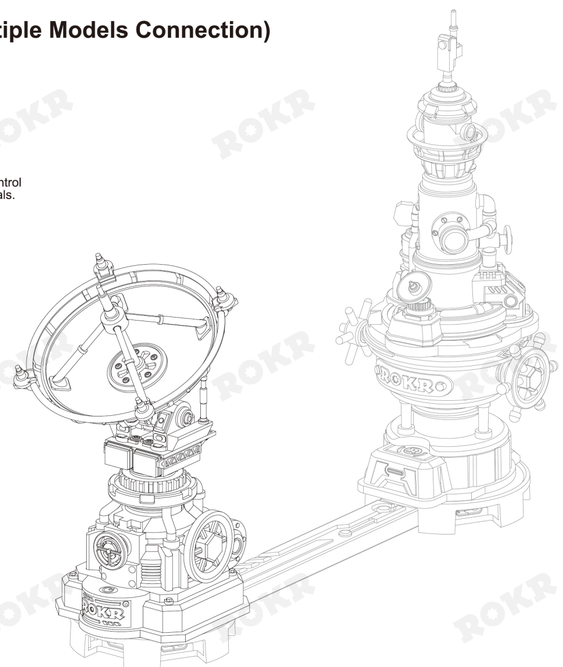

The other model in the picture need to be purchased separately.